GE Profile™ 27" Drop-In Electric Range

Model#: JMP31CLCC

Available Models

- **Black**
  JMP31BLBB
- **White**
  JMP31WCWW

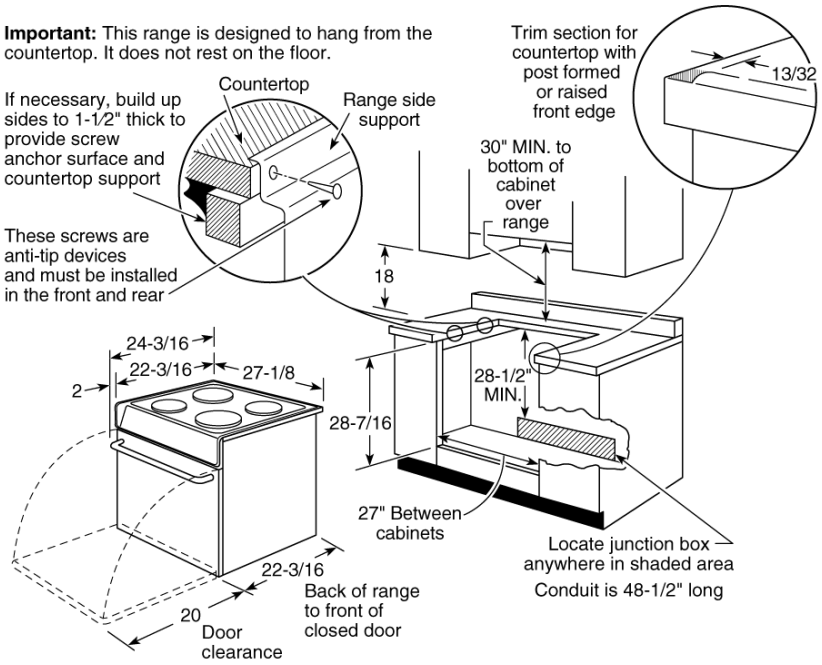

FEATURES

6" Heating Element (s)	3 Plug-In Calrod™
8" Heating Element (s)	1 Plug-In Calrod™
Auto Oven Shut-Off	Yes
Automatic Self-Clean Oven Door Lock	Yes
Clock & Minute Timer	Electronic Digital
Control Location	Upfront
Delay Bake Option (Time Bake)	Yes
Digital Temperature Display	Yes
Electronic Oven Control	EasySet III
Element Type	4 Plug-In Calrod™
Heating Element "ON" Indicator Light	Yes
Infinite Heat Controls	Yes
Lift-Up Overhanging Cooktop	Bisque Porcelain Enamel
Oven Interior Light	Yes
Oven Type / Cleaning	Thermal / Self-Cleaning
Touchpad Controls	Yes
Variable Cleaning time	Yes
Frameless Lift-off Oven Door	Bisque Glass
Certified Sabbath Mode	Yes
Oven Racks	2
Removable One-Piece Drip Bowls	Chrome

APPEARANCE

Color Appearance	Bisque on Bisque
Handle	Sure Grip Designer-Style
Oven Door(s) with Window(s)	Big View

WEIGHTS & DIMENSIONS

Approximate Shipping Weight	124 lb
Cabinet Width	27 in
Net Weight (lbs.)	104 lb
Overall Depth	24 3/16 in
Overall Height	28 7/16 in
Overall Width	27 1/8 in
Depth with Door Open (in.)	42-3/16
Depth Without Handle (in.)	22-3/16
Oven Interior Dimensions (W x H x D) (in.)	19 x 15 x 18

POWER / RATINGS

Amp Rating at 208V	40
Amp Rating at 240V	40
KW Rating at 208V	7.3
KW Rating at 240V	9.8